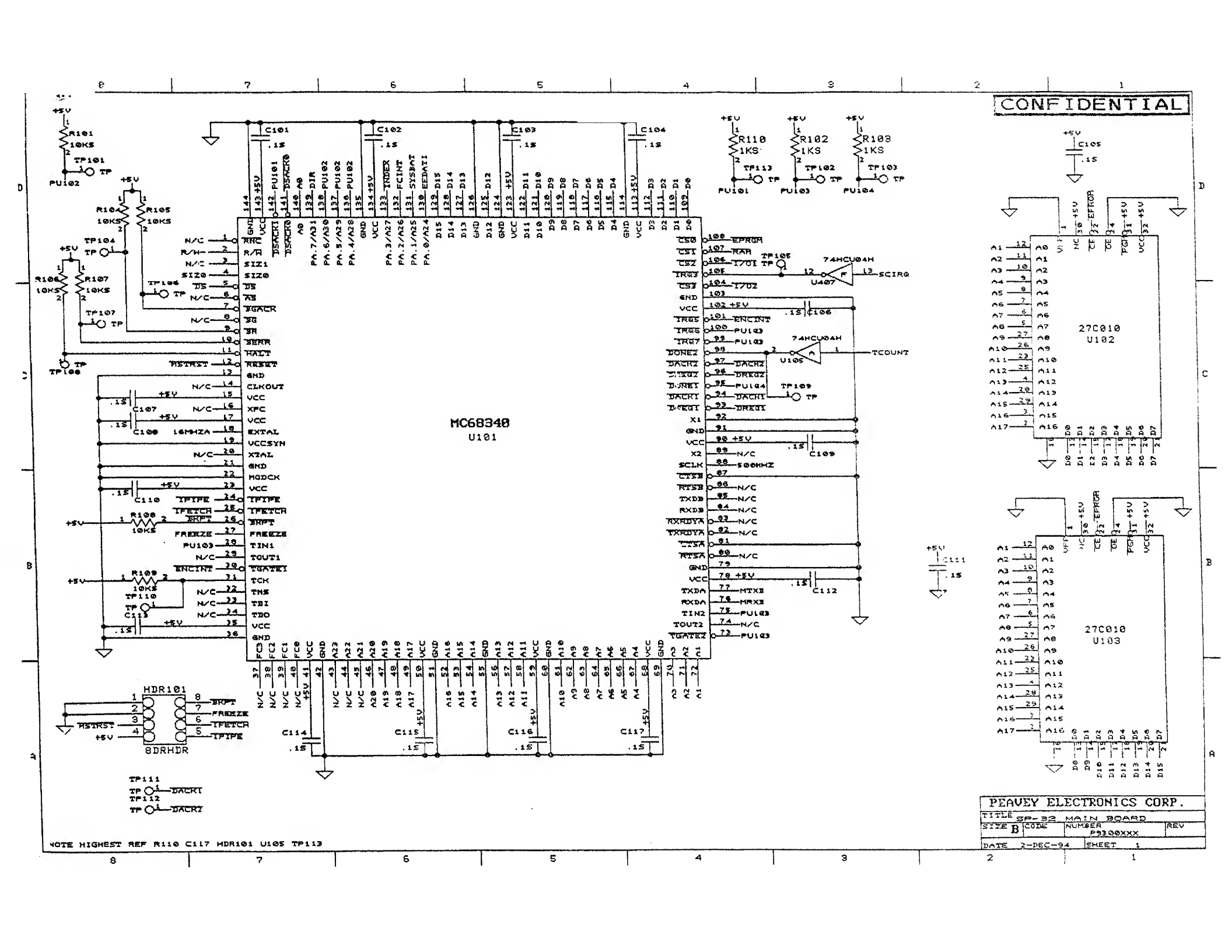
CONFIDENTIAL
MC68340
U101
27C010
U102
27C010
U103
74HCU04H
U407
74HCU04H
U105
HDR101
8DRHDR
PEAVEY ELECTRONICS CORP.
TITLE SP-32 MAIN BOARD
SIZE B
CODE
NUMBER P9300XXX
REV
DATE 2-DEC-94
SHEET 1
NOTE HIGHEST REF R110 C117 HDR101 U105 TP113

CONFIDENTIAL

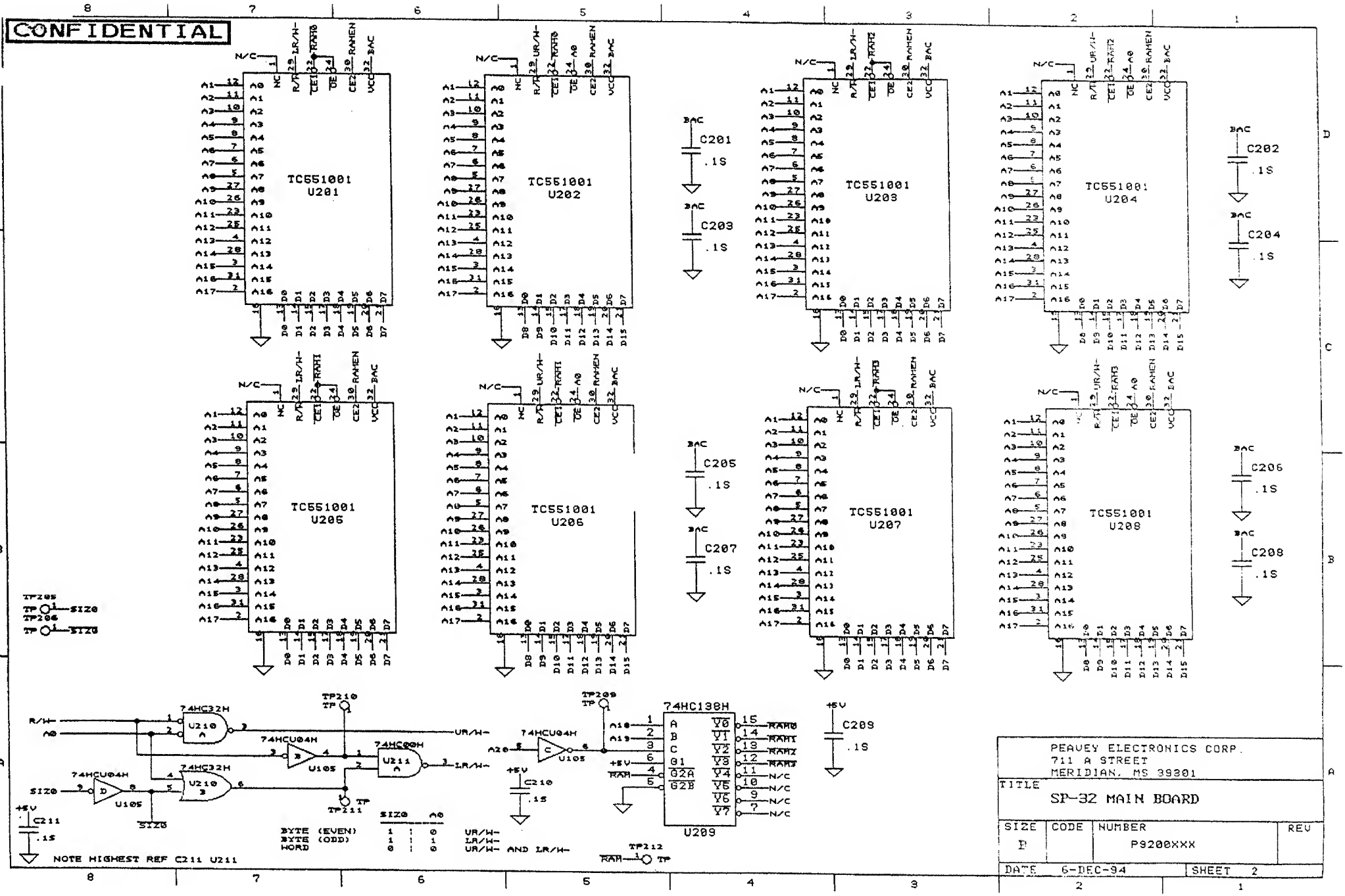

PEAVEY ELECTRONICS CORP.
711 A STREET
MERIDIAN, MS 39301

TITLE: SP-32 MAIN BOARD

SIZE	CODE	NUMBER	REV
D		P9200XXX	

DATE 6-DEC-94 SHEET 2

CONFIDENTIAL

NOTE HIGHEST REF CR301 R326 C317 Q305 HDR301 U312 TP336

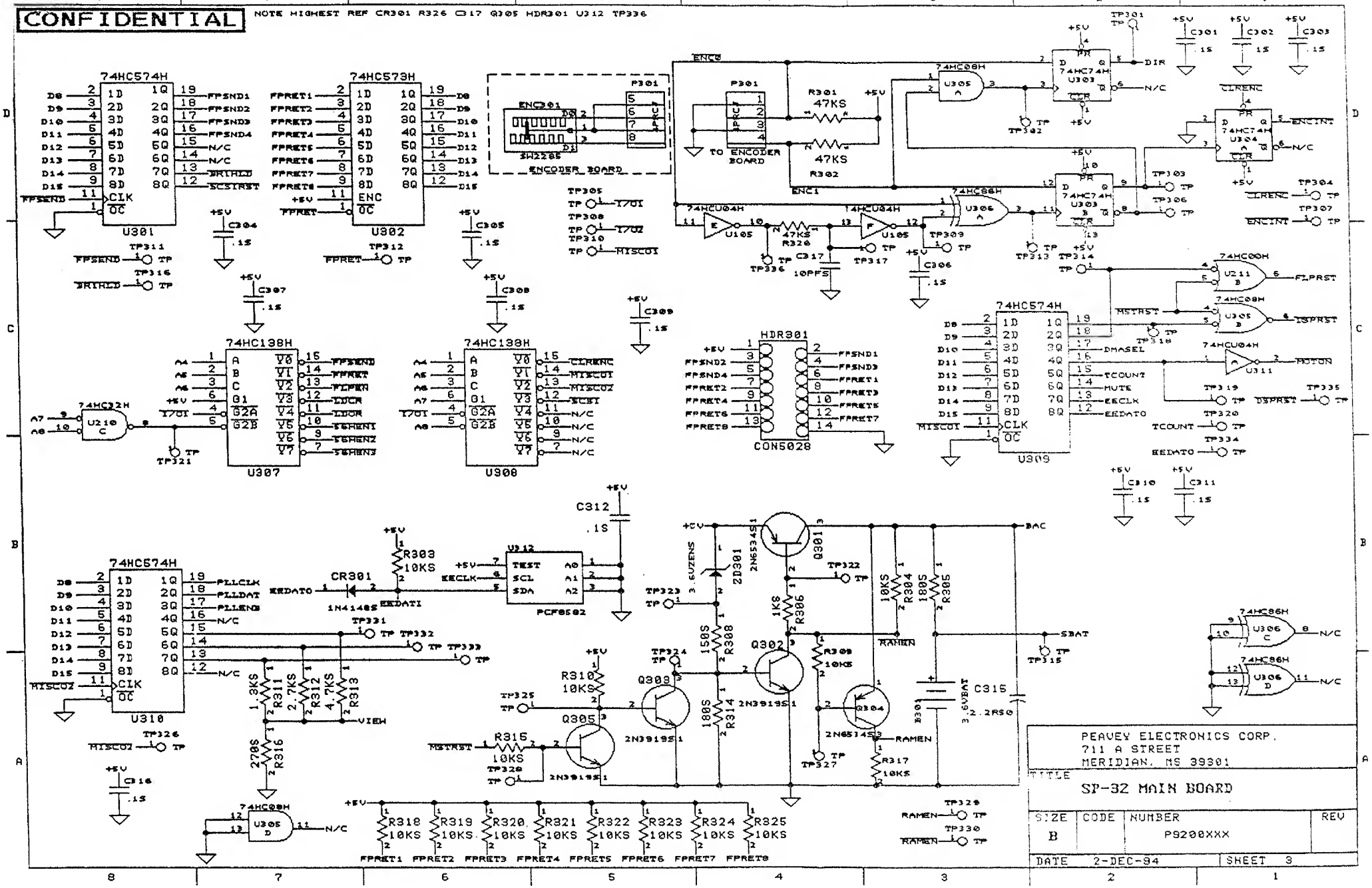

PEAVEY ELECTRONICS CORP.
711 A STREET
MERIDIAN, MS 39301

TITLE: SP-32 MAIN BOARD

SIZE	CODE	NUMBER	REV
B		P9200XXX	

DATE 2-DEC-94 SHEET 3

CONFIDENTIAL

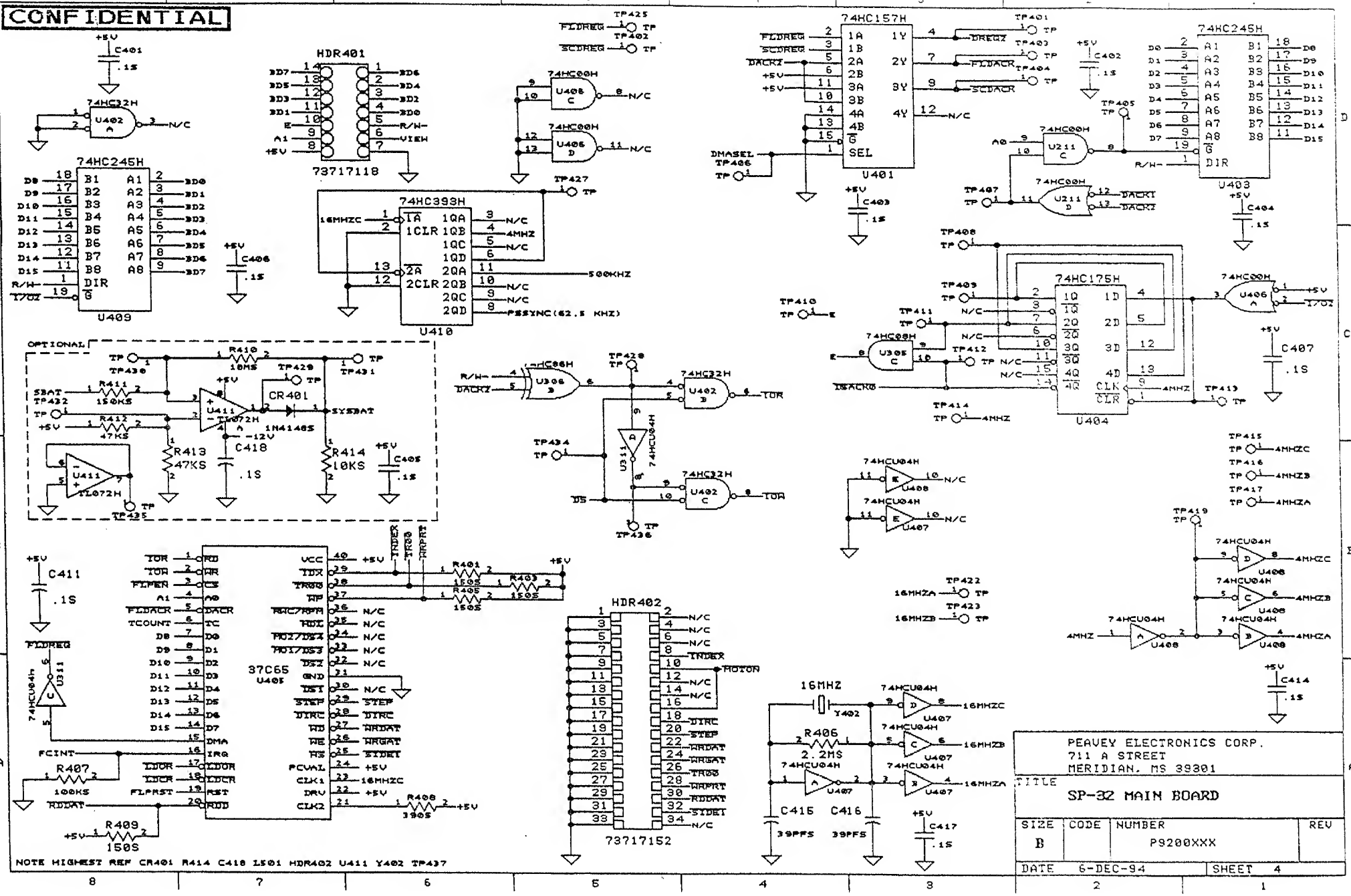

CONFIDENTIAL

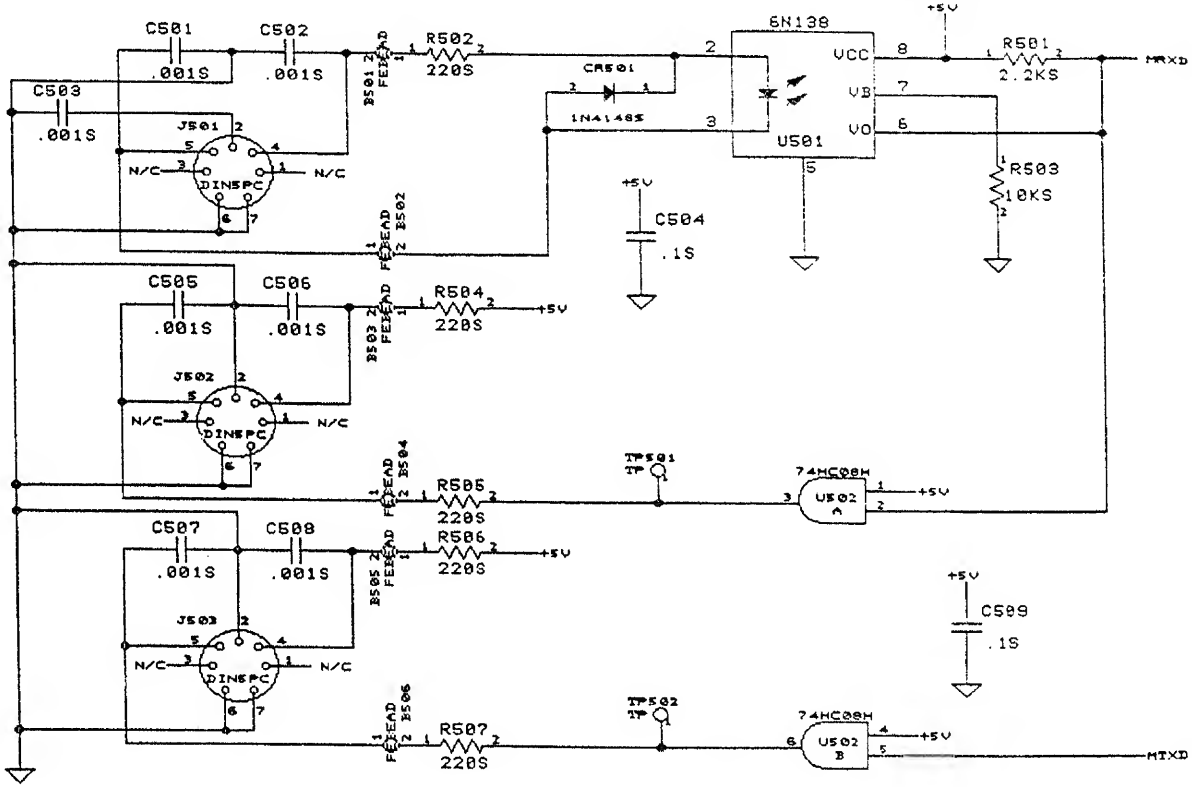

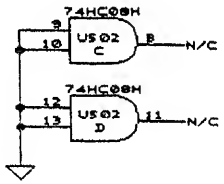

NOTE HIGHEST REF CR501 R507 C509 U502 J503 B501 TP502

PEAVEY ELECTRONICS CORP. 711 A STREET MERIDIAN, MS 39301			
TITLE: SP-32 MAIN BOARD			
SIZE: B	CODE:	NUMBER: P9200XXX	REV:
DATE: 22-DEC-93		SHEET: 5	

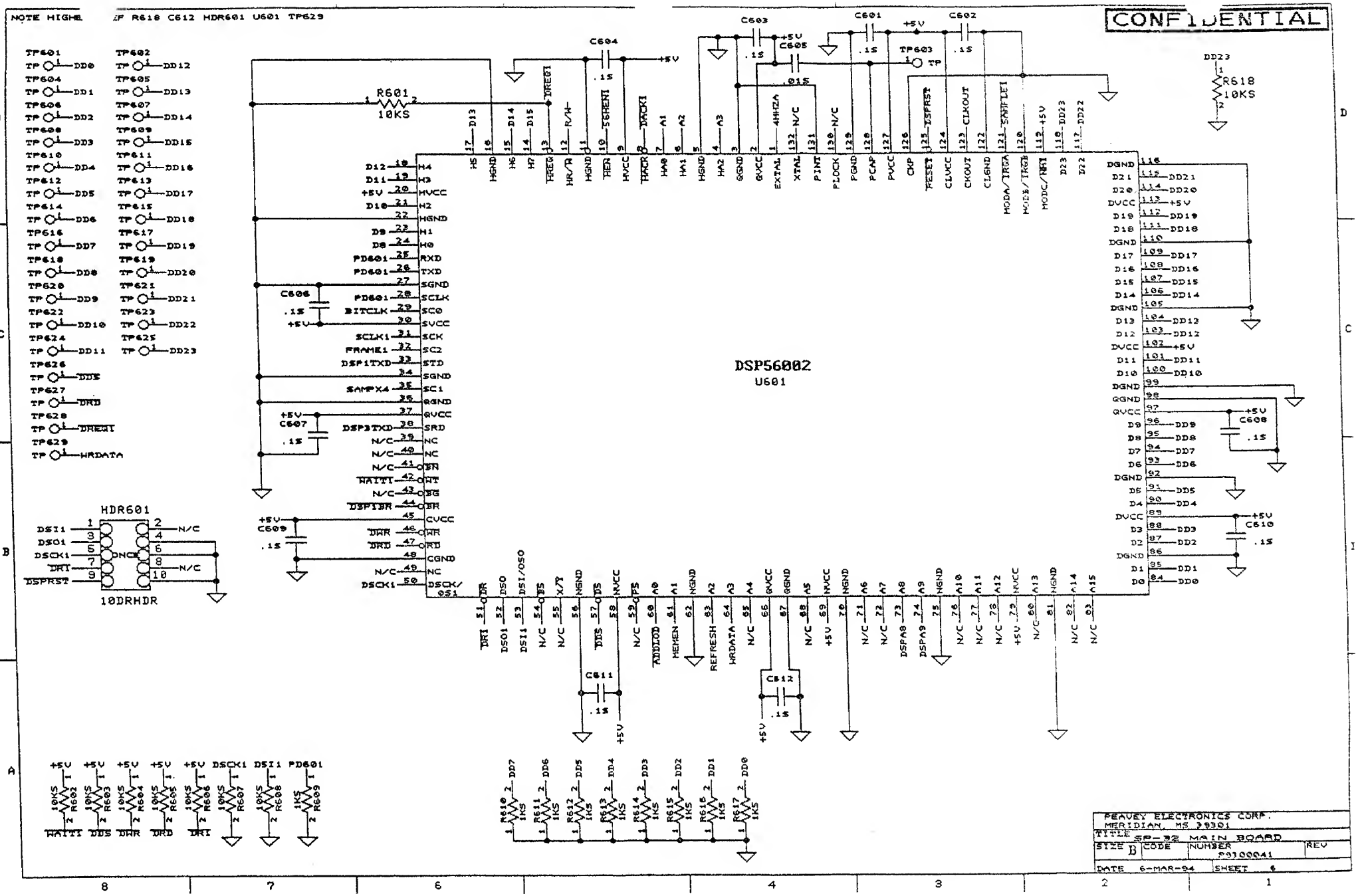
CONFIDENTIAL
NOTE HIGHE ZF R618 C612 HDR601 U601 TP629
DSP56002
U601
HDR601
10DRHDR
PEAVEY ELECTRONICS CORP.
MERIDIAN, MS 39301
TITLE SP-32 MAIN BOARD
SIZE B
CODE
NUMBER
REV
DATE 6-MAR-94
SHEET 6

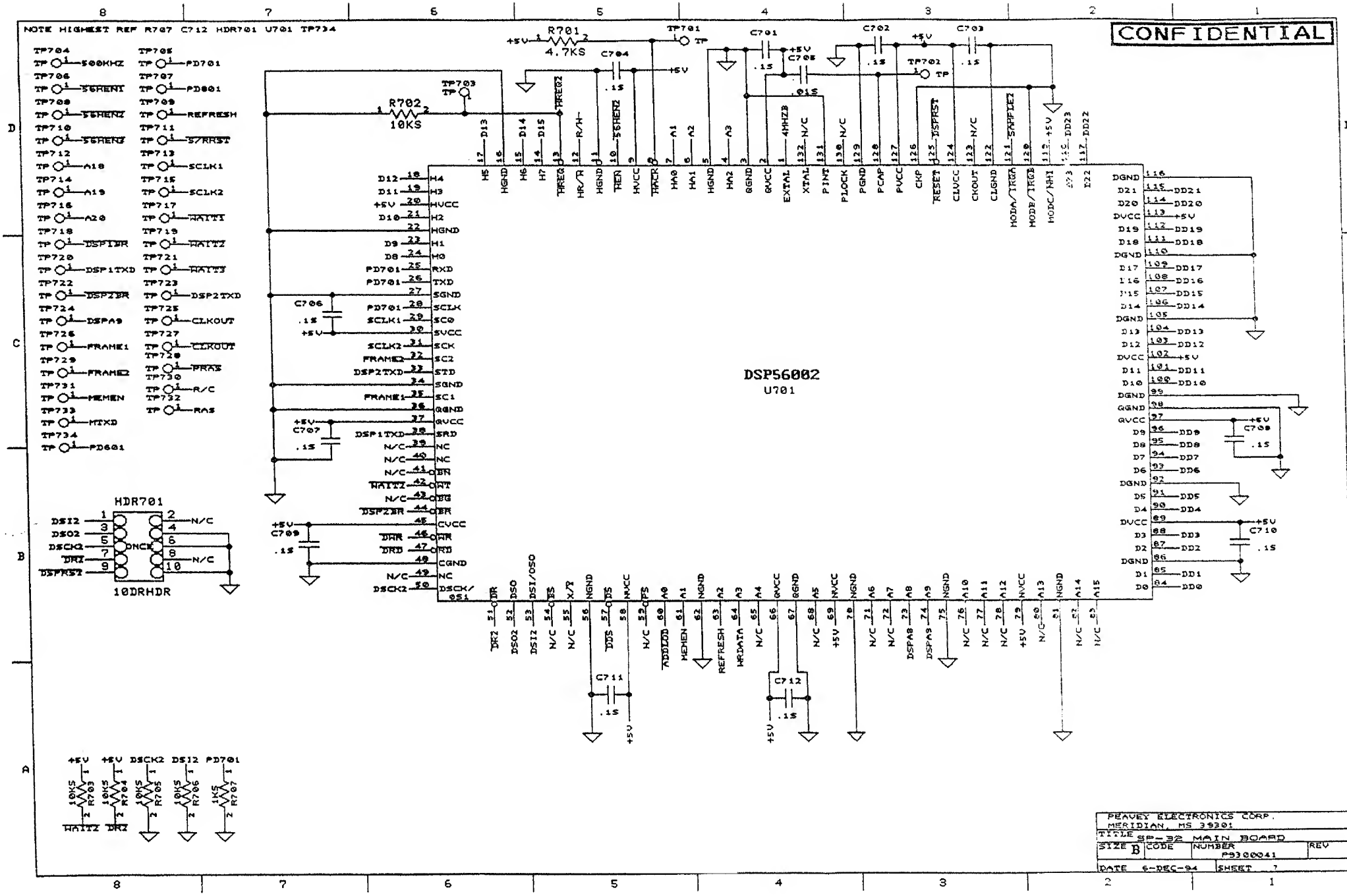
CONFIDENTIAL
NOTE HIGHEST REF R707 C712 HDR701 U701 TP734
DSP56002
U701
HDR701
10DRHDR
PEAVEY ELECTRONICS CORP.
MERIDIAN, MS 39301
TITLE SP-32 MAIN BOARD
SIZE B
CODE
NUMBER P9300041
REV
DATE 6-DEC-94
SHEET 7

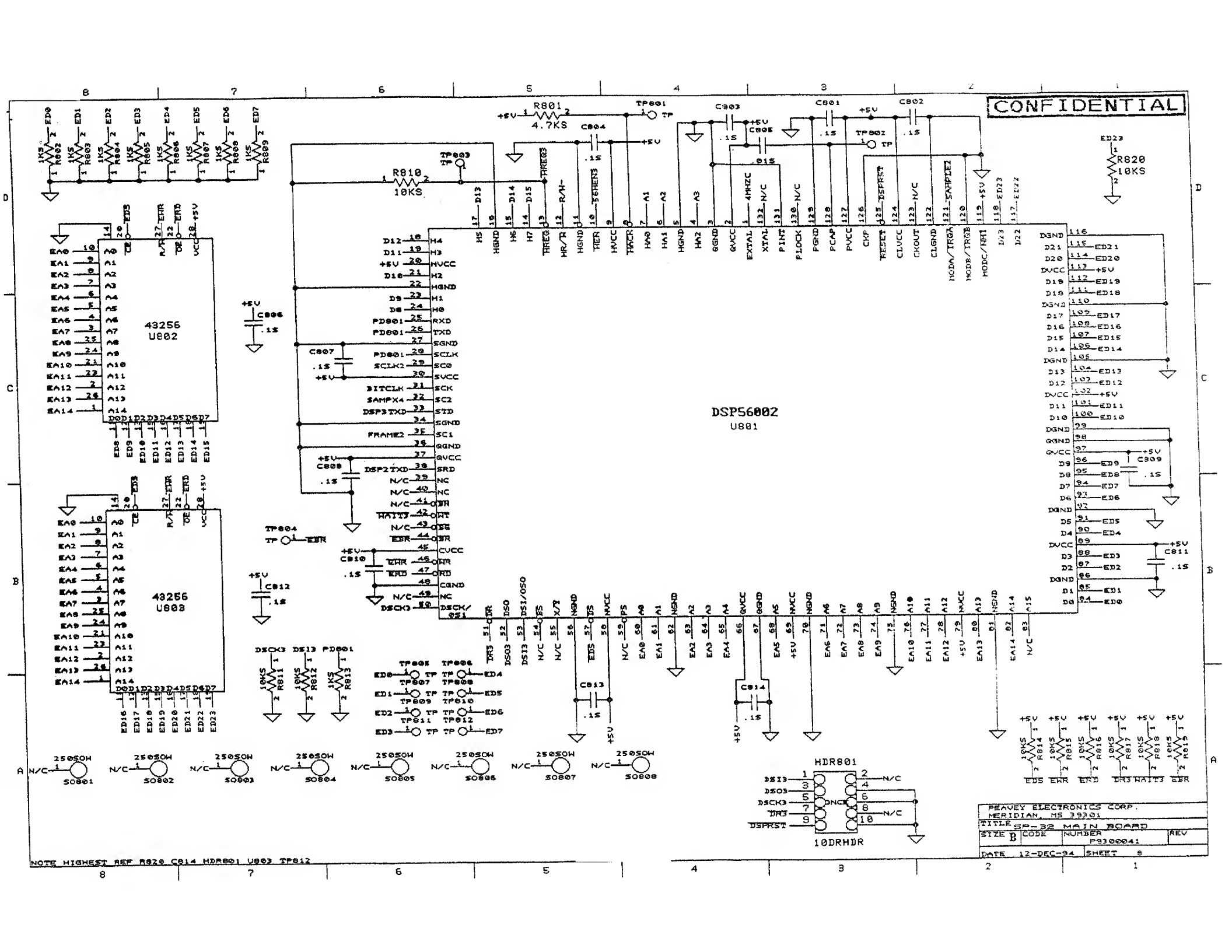
CONFIDENTIAL
DSP56002
U801
43256
U802
43256
U803
R801
4.7KS
R810
10KS
R820
10KS
HDR801
10DRHDR
PEAVEY ELECTRONICS CORP.
MERIDIAN, MS 39301
TITLE SP-32 MAIN BOARD
SIZE B
CODE
NUMBER P9300041
REV
DATE 12-DEC-94
SHEET 8
NOTE HIGHEST REF R820 C814 HDR801 U803 TP812

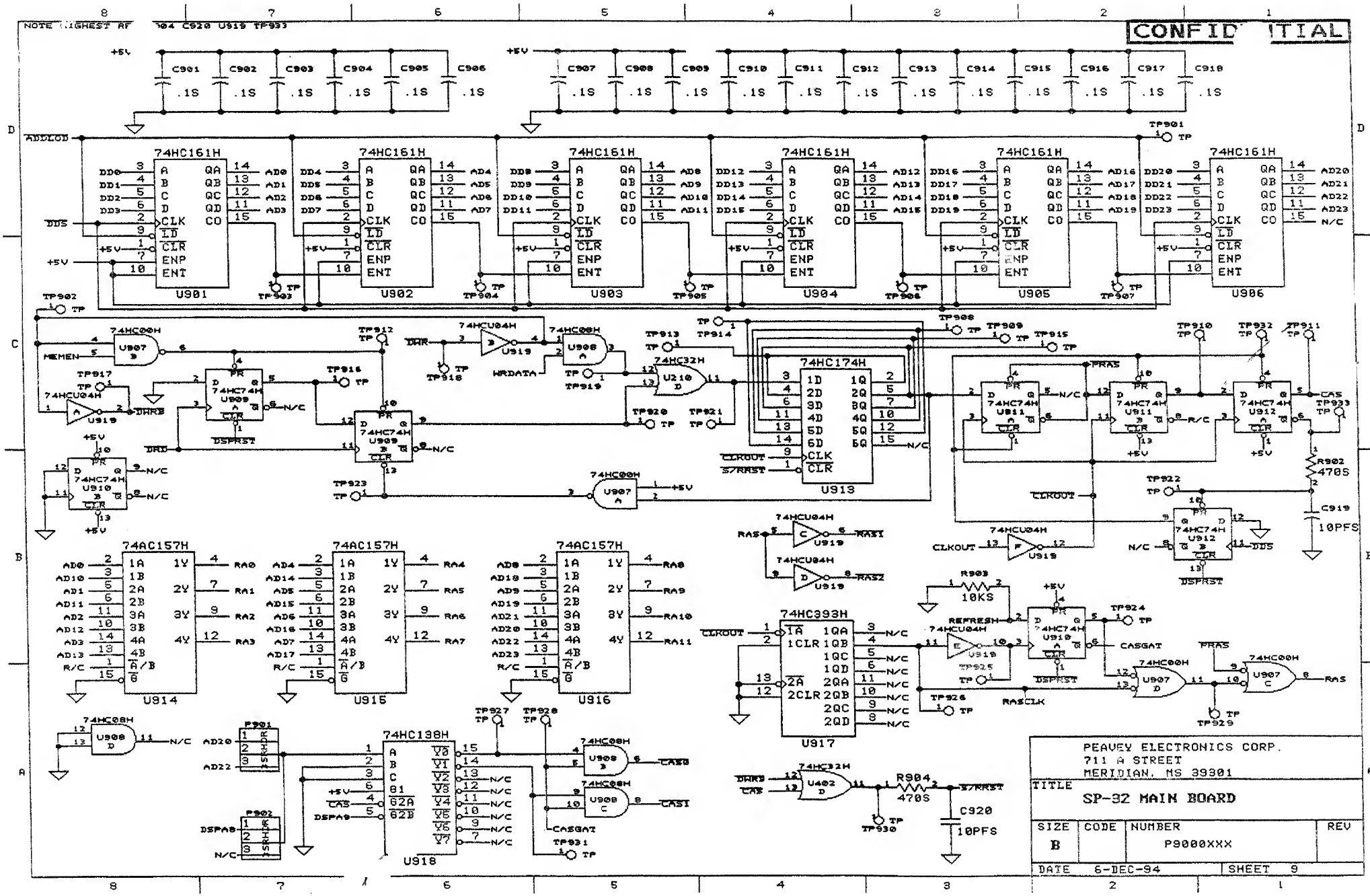
CONFIDENTIAL
74HC161H
U901
U902
U903
U904
U905
U906
74HC174H
U913
74AC157H
U914
U915
U916
74HC393H
U917
74HC138H
U918
74HC00H
74HCU04H
74HC08H
74HC32H
74HC74H
R902
470S
C919
10PFS
R903
10KS
R904
470S
C920
10PFS
PEAVEY ELECTRONICS CORP.
711 A STREET
MERIDIAN, MS 39301
TITLE
SP-32 MAIN BOARD
SIZE
B
CODE
NUMBER
P9000XXX
REV
DATE 6-DEC-94
SHEET 9

CONFIDENTI

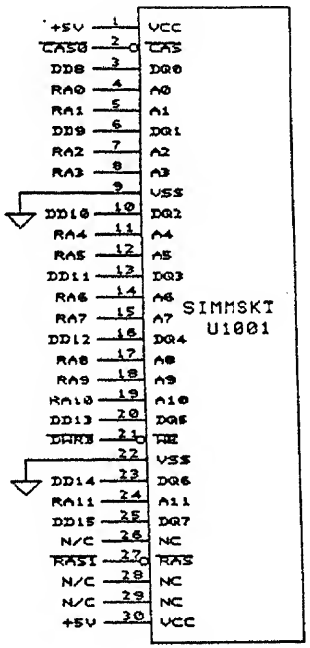

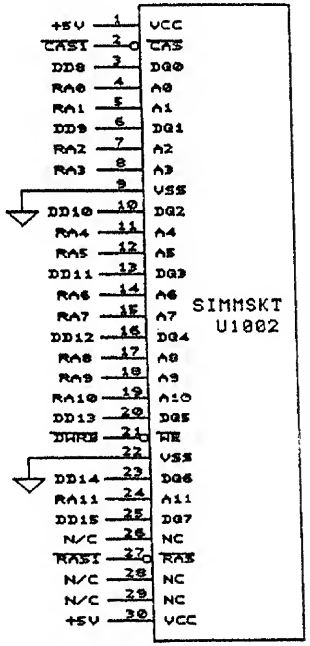

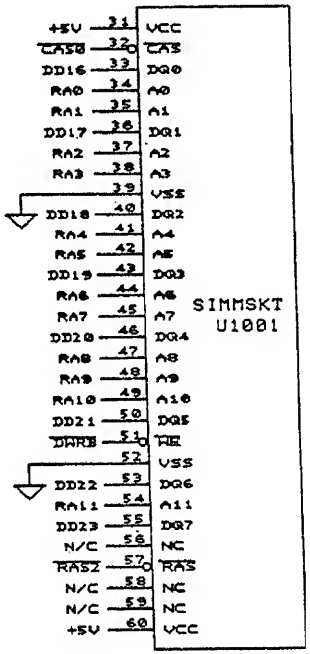

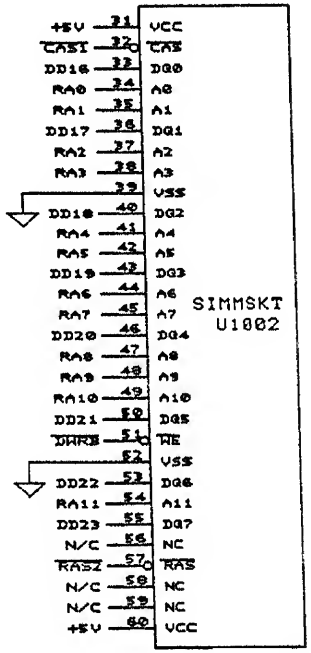

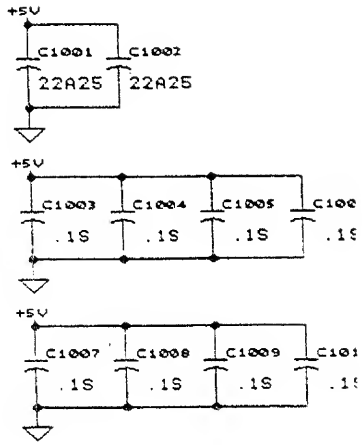

TP1001 TP1002
TP1001 — AD0 TP1002 — AD12
TP1003 TP1004
TP1003 — AD1 TP1004 — AD13
TP1005 TP1006
TP1005 — AD2 TP1006 — AD14
TP1007 TP1008
TP1007 — AD3 TP1008 — AD15
TP1009 TP1010
TP1009 — AD4 TP1010 — AD16
TP1011 TP1012
TP1011 — AD5 TP1012 — AD17
TP1013 TP1014
TP1013 — AD6 TP1014 — AD18
TP1015 TP1016
TP1015 — AD7 TP1016 — AD19
TP1017 TP1018
TP1017 — AD8 TP1018 — AD20
TP1019 TP1020
TP1019 — AD9 TP1020 — AD21
TP1021 TP1022
TP1021 — AD10 TP1022 — AD22
TP1023 TP1024
TP1023 — AD11 TP1024 — AD23

NOTE HIGHEST REF C1010 U1002 TP1024

PEAVEY ELECTRONICS CORP.
711 A STREET
MERIDIAN, MS 39301

TITLE
SP-32 MAIN BOARD

SIZE	CODE	NUMBER
B		P9000XXX

DATE 14-APR-94 SHEET 1

8 7 6 5 4 3 2 1

CON :DENTIAL

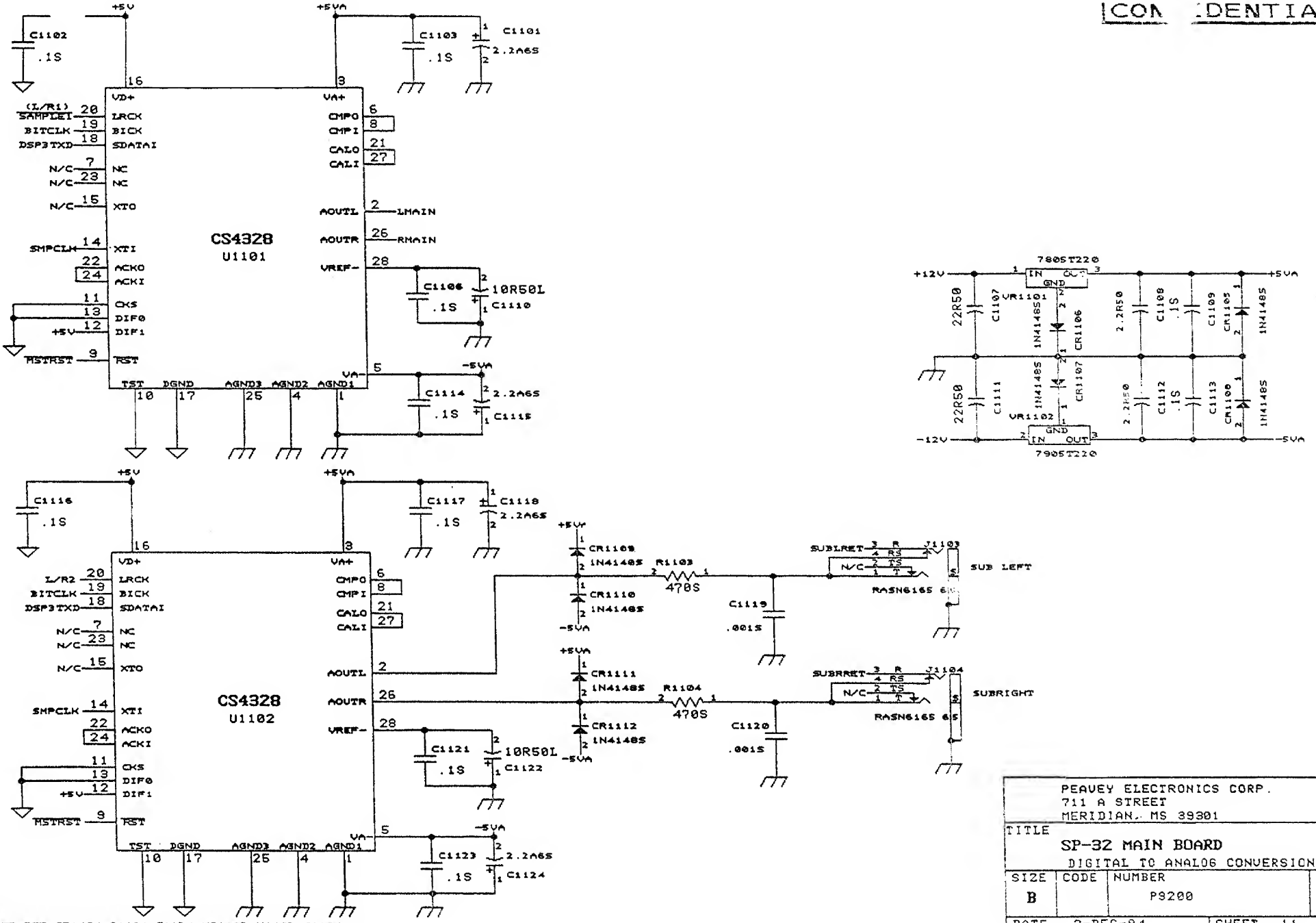

PEAVEY ELECTRONICS CORP.
711 A STREET
MERIDIAN, MS 39301

TITLE
SP-32 MAIN BOARD
DIGITAL TO ANALOG CONVERSION

SIZE	CODE	NUMBER	R
B		P9200	
DATE 2-DEC-94		SHEET 11	

NOTE HIGHEST REF CR1404 R1104 C1124 VR1102 U1102 J1104

8 7 6 5 4 3 2 1

NOTE HIGHEST REF CR1209 R1224 C1215 Q1205 U1202 J1202 TP1216

CONFIDENTIAL

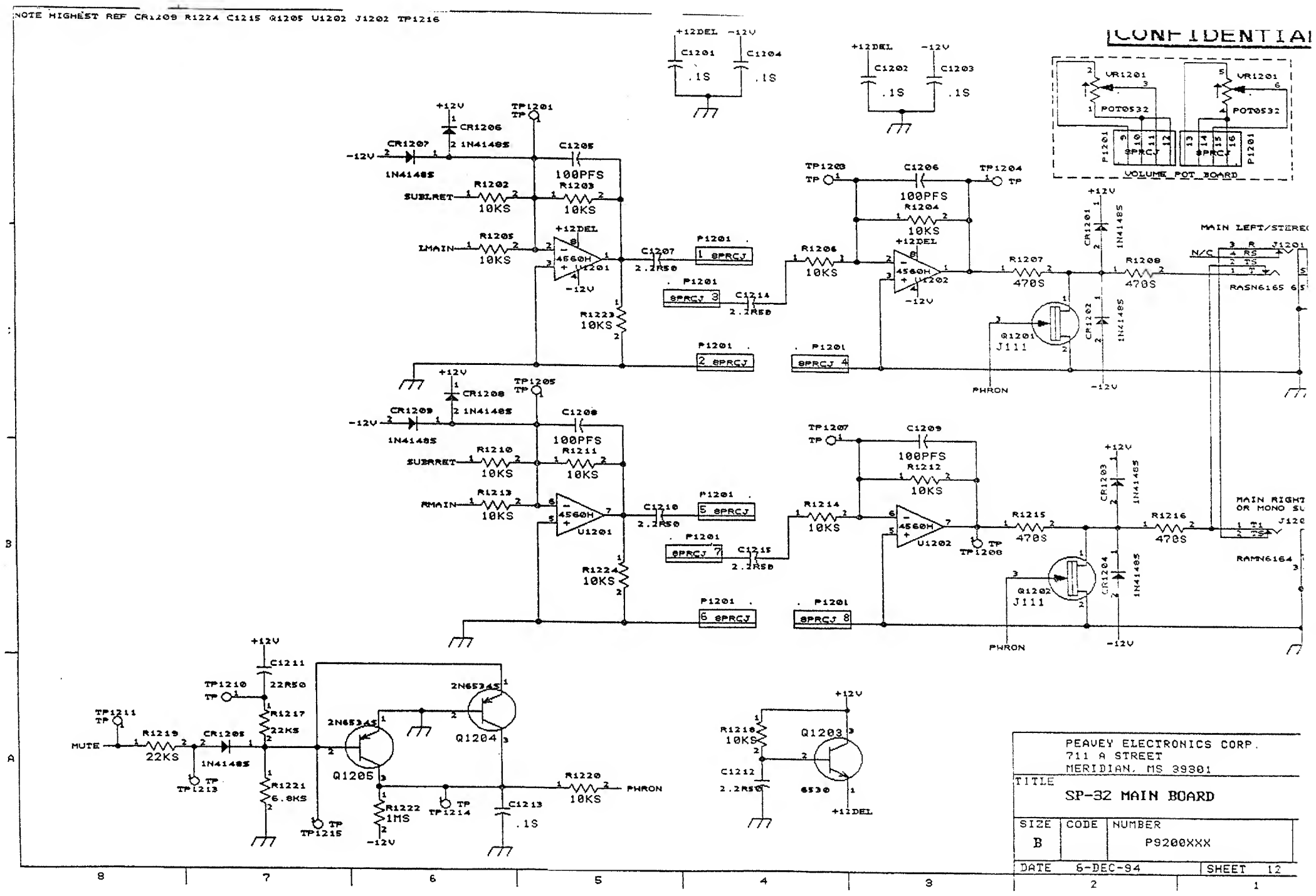

PEAVEY ELECTRONICS CORP. 711 A STREET MERIDIAN, MS 39301		
TITLE: SP-32 MAIN BOARD		
SIZE: B	CODE:	NUMBER: P9200XXX
DATE: 6-DEC-94		SHEET: 12

8 7 6 5 4 3 2 1

A B

CONFIDENTI

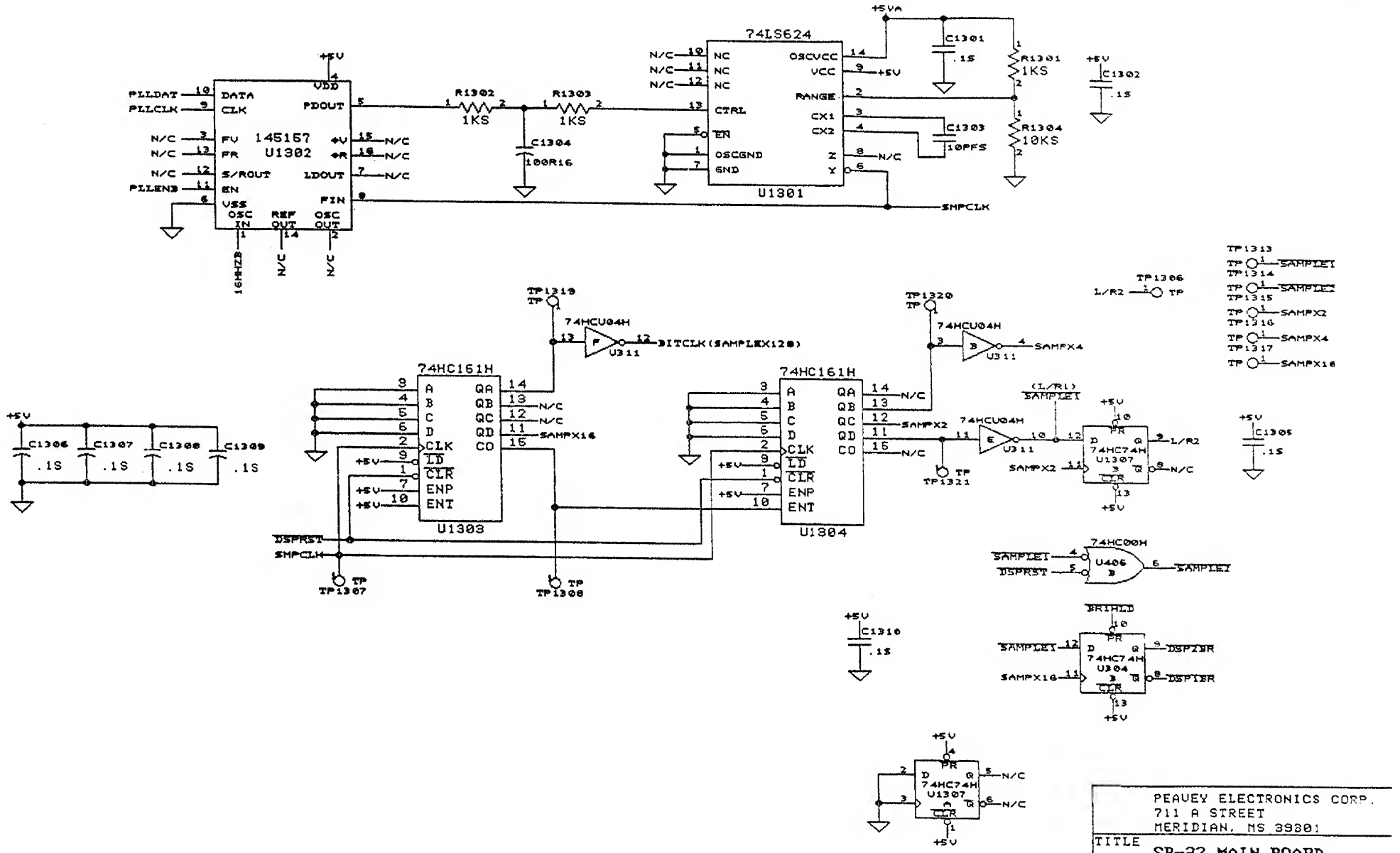

NOTE HIGHEST REF R1304 C1312 U1307 TP1321

PEAVEY ELECTRONICS CORP. 711 A STREET MERIDIAN, MS 39301	
TITLE	SP-32 MAIN BOARD CLOCK, INPUT SELECT
SIZE: B	CODE:
NUMBER: P9200XXX	
DATE: 15-FEB-95	SHEET:

NOTE HIGHEST REF R1407 C1401 Q1402 U1401 J1401 TP1403

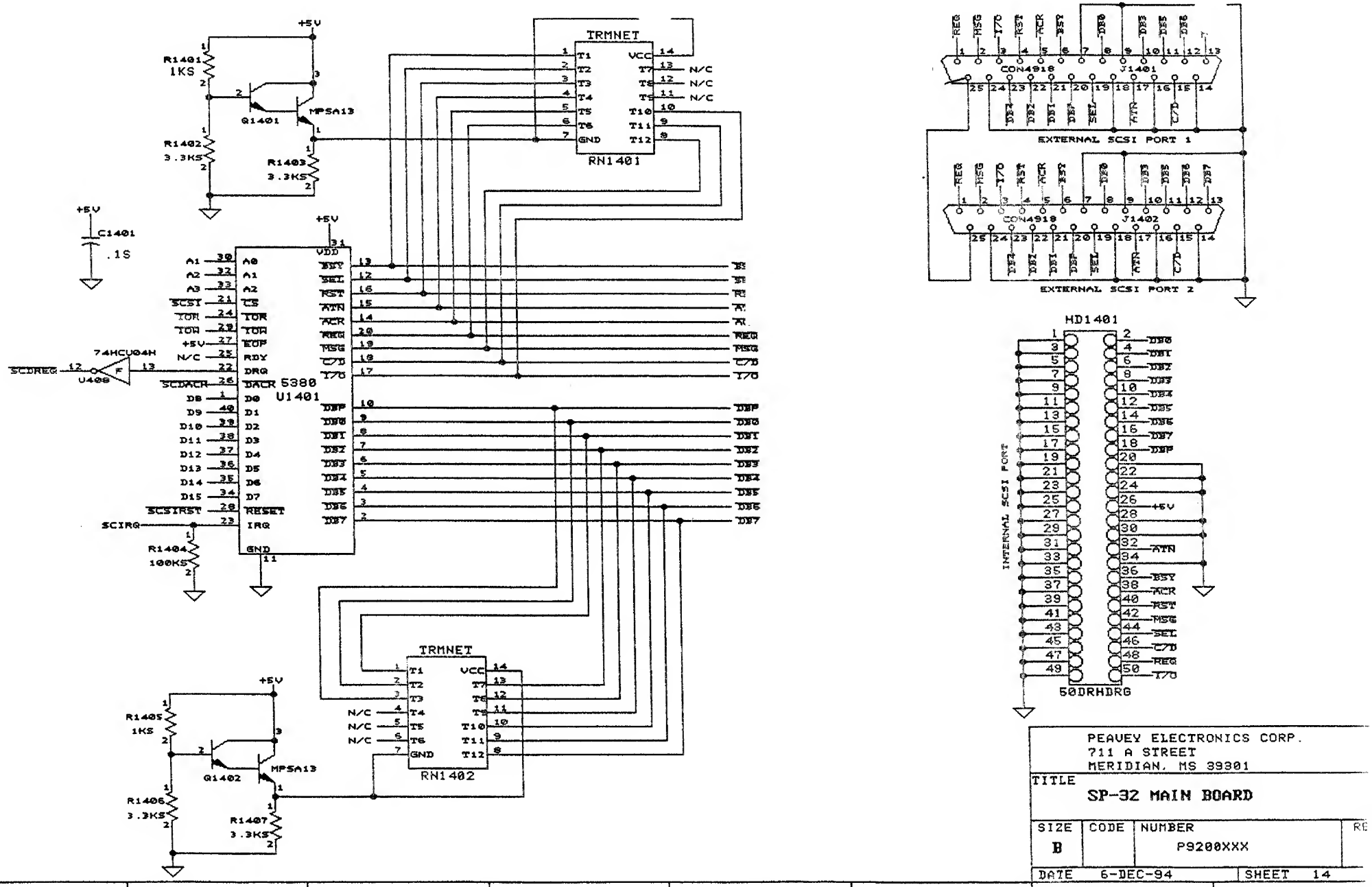

	PEAVEY ELECTRONICS CORP. 711 A STREET MERIDIAN, MS 39301
TITLE	SP-32 MAIN BOARD
SIZE: B	CODE:
NUMBER	P9200XXX
DATE	6-DEC-94
SHEET	14

DTE HIGHEST REF CR1516 R1510 C1519 Q1501 L1501 VR1504 TP1505

CONFIDENTIAL

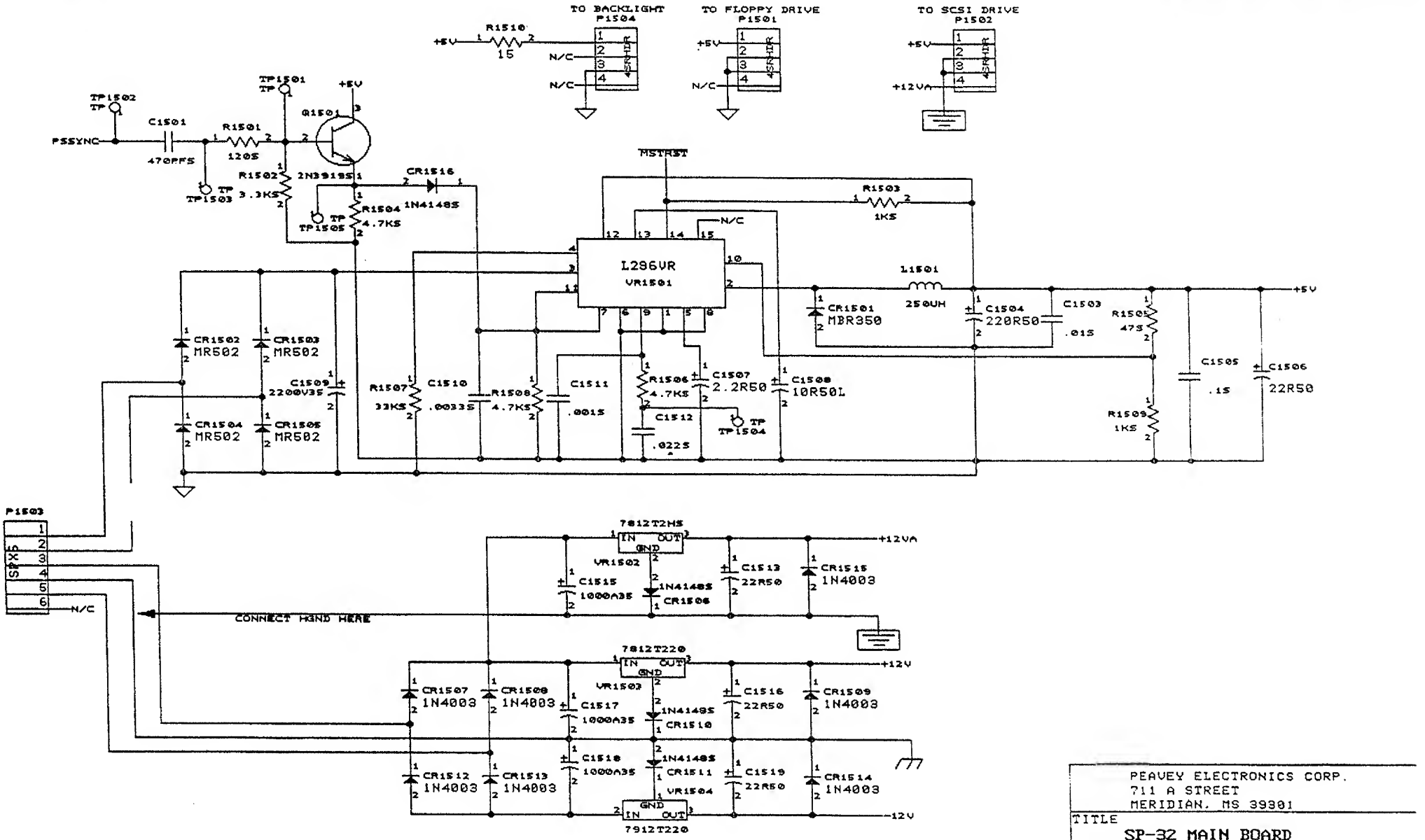

PEAVEY ELECTRONICS CORP.
711 A STREET
MERIDIAN, MS 39301

TITLE
SP-32 MAIN BOARD

SIZE	CODE	NUMBER	RE
B		P90XXXXX	

DATE 2-DEC-94 SHEET 15

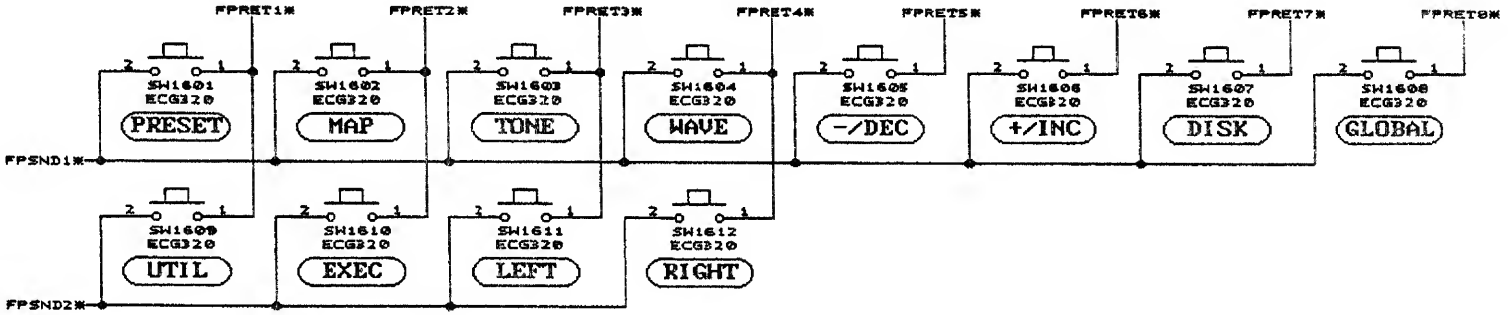

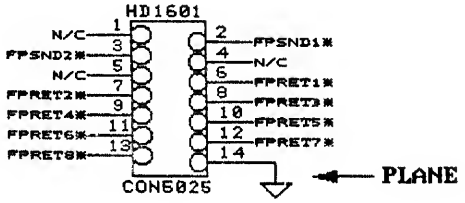

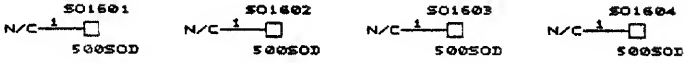

PEAVEY ELECTRONICS CORP.
711 A STREET
MERIDIAN, MS 39301

TITLE
SP32 FRONT PANEL BOARD

SIZE	CODE	NUMBER	REV
B		P9000XXX	

DATE 18-DEC-93 SHEET 16

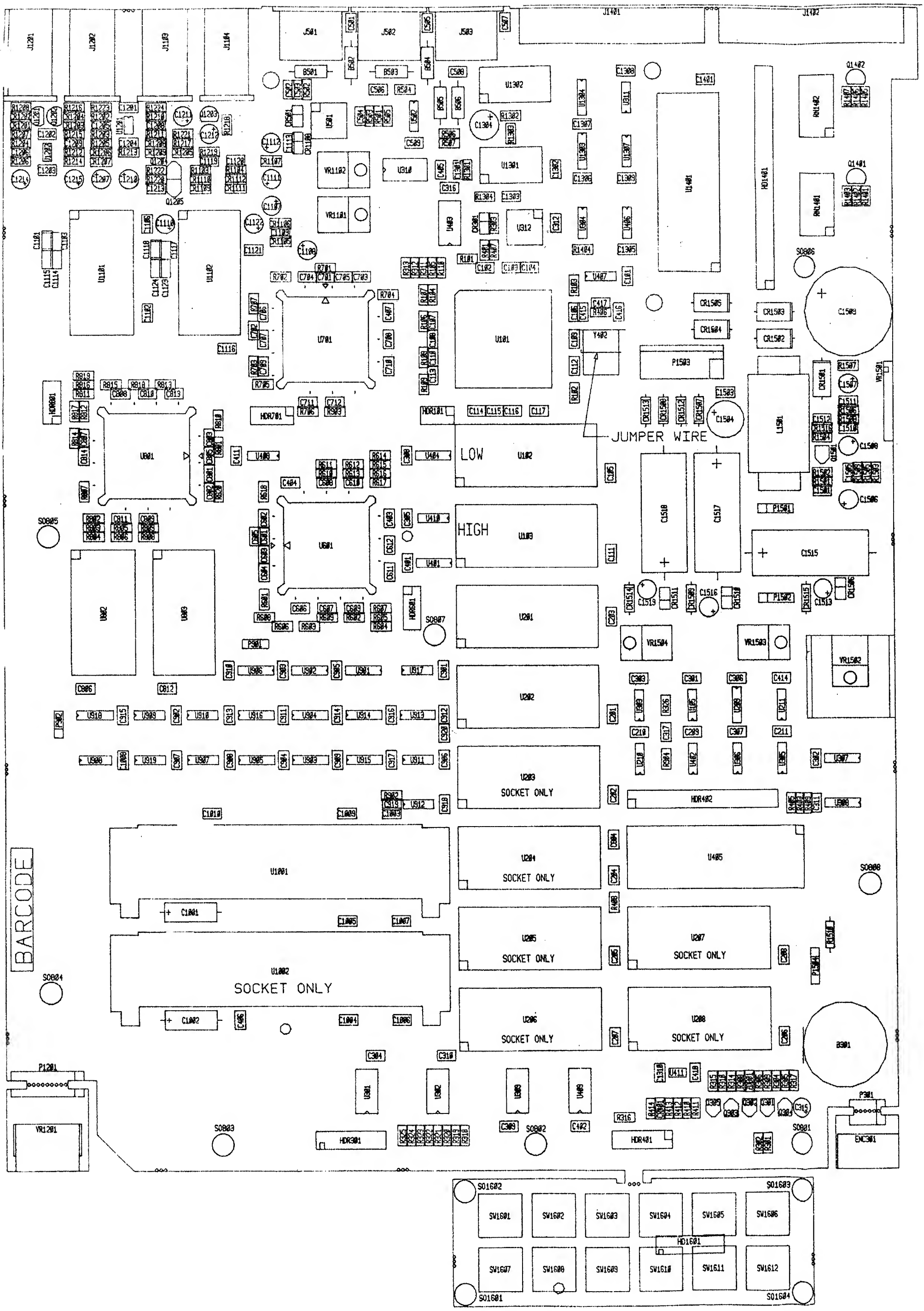
J1201
J1202
J1203
J1204
J501
J502
J503
J1401
J1402
U1302
U501
U1301
U1401
VR1102
VR1101
U310
U312
U403
U101
U102
U701
U101
Y402
P1503
HDR701
HDR101
JUMPER WIRE
LOW
U102
HIGH
U103
U801
U802
U803
HDR801
U291
U202
U203
SOCKET ONLY
U204
SOCKET ONLY
U405
U205
SOCKET ONLY
U207
SOCKET ONLY
U206
SOCKET ONLY
U208
SOCKET ONLY
U1001
U1002
SOCKET ONLY
BARCODE
P1201
VR1201
HDR301
HDR401
HDR402
P1501
P1502
VR1504
VR1503
VR1502
C1509
C1504
C1510
C1517
C1515
C1513
C1519
C1516
B301
ENC301
SW1601
SW1602
SW1603
SW1604
SW1605
SW1606
SW1607
SW1608
SW1609
SW1610
SW1611
SW1612
HD1601
SO1601
SO1602
SO1603
SO1604
SO801
SO802
SO803
SO804
SO805
SO806
SO807
SO808

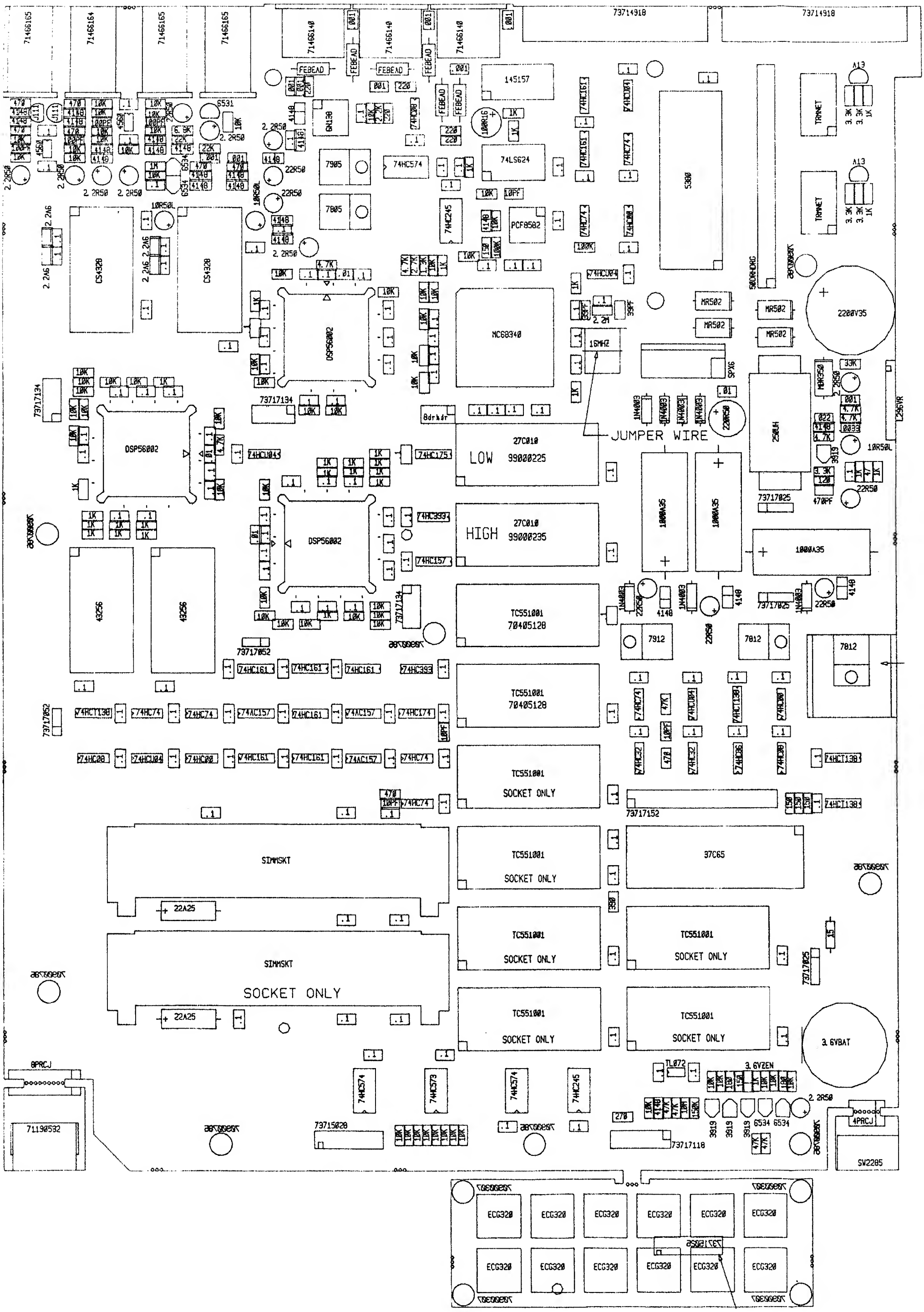
73714918
73714918
71466165
71466164
71466165
71466165
71466140
71466140
71466140
FEBEAD
FEBEAD
FEBEAD
145157
74HC161
74HC04
74HC74
74HC00
5380
TRIMET
TRIMET
6N130
7905
7805
74HC574
74LS624
74HC245
PCF8582
CS4328
CS4328
OSP56002
MC68340
16MHZ
SPX6
MR502
MR502
MR502
2200V35
5600HORG
73717134
OSP56002
OSP56002
74HC393
74HC175
74HC1043
27C010
LOW 99000225
JUMPER WIRE
27C010
HIGH 99000235
1000A35
1000A35
1000A35
73717025
73717025
43256
43256
TC551001
70405128
TC551001
70405128
TC551001
SOCKET ONLY
7912
7912
7912
74HCT138
74HC74
74HC157
74HC161
74HC157
74HC174
74HC08
74HC04
74HC00
74HC32
74HC86
74HC30
74HCT138
73717052
73717152
SIMMSKT
SOCKET ONLY
22A25
TC551001
SOCKET ONLY
TC551001
SOCKET ONLY
TC551001
SOCKET ONLY
TC551001
SOCKET ONLY
37C65
73717025
3.6VBAT
8PRCJ
71190532
73715020
74HC574
74HC573
74HC574
74HC245
TL072
3.6VZEN
73717118
4PRCJ
SW2285
ECG320
ECG320
ECG320
ECG320
ECG320
ECG320
ECG320
ECG320
ECG320
ECG320
ECG320
ECG320